蜗轮蜗杆减速箱--WG17

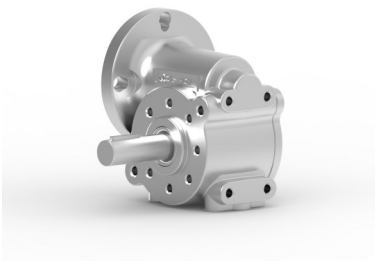

- 低噪声蜗轮蜗杆减速箱
- 长寿命，免维护
- 高强度压铸的外壳
- 蜗轮采用黄铜制造
- 根据要求，轴可在左侧、右侧或双轴输出

- Low noise worm gearbox
- Longer lifetime, maintenance-free
- Housing made of high tensile die-cast
- Worm wheel made of brass
- Shaft output to left, right or double sides on request

数据--Data									
减速比 Reduction ratio		5	10	15	25	30	40	50	75
效率 Efficiency		0.79	0.69	0.6	0.48	0.43	0.3	0.38	0.23
连续转矩 Continuous torque	Ncm	75							
减速箱重量 Weight of gearbox	kg	0.2							
轴向载荷/径向载荷 Axial load/radial load	N	100/200							

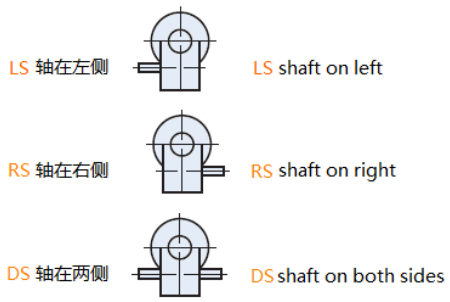
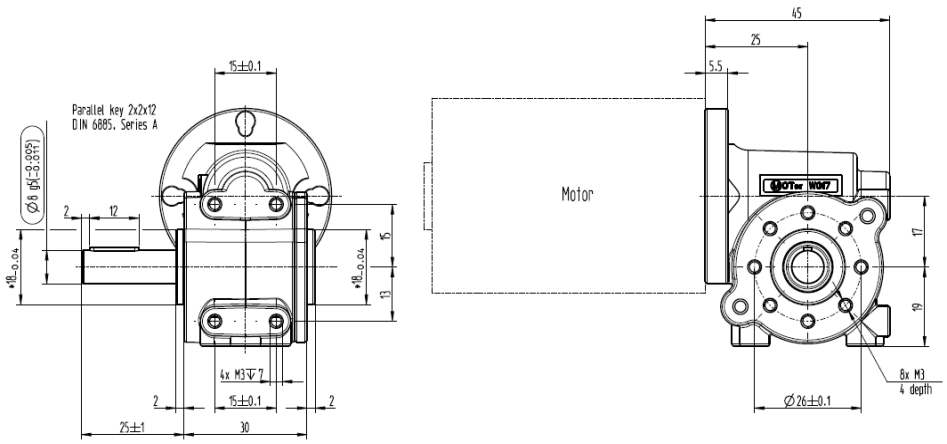
尺寸为毫米-Dimensions in mm